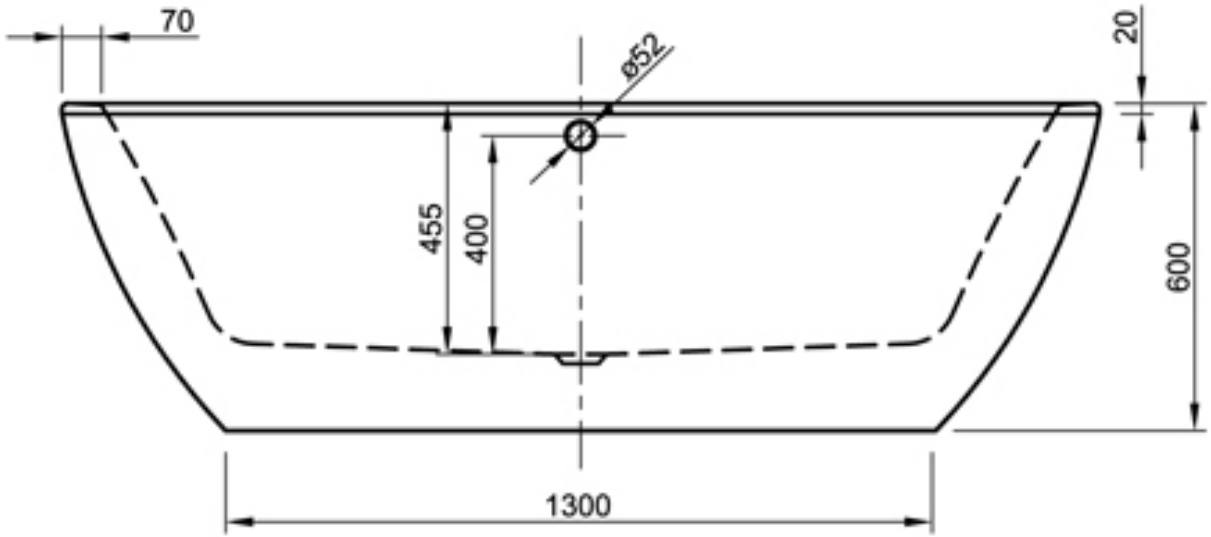

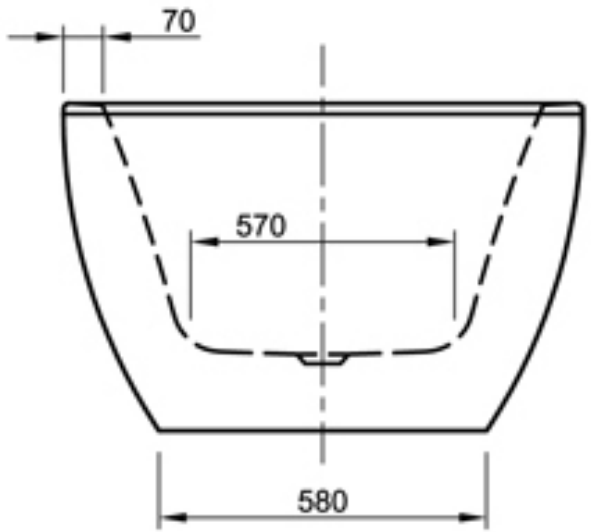

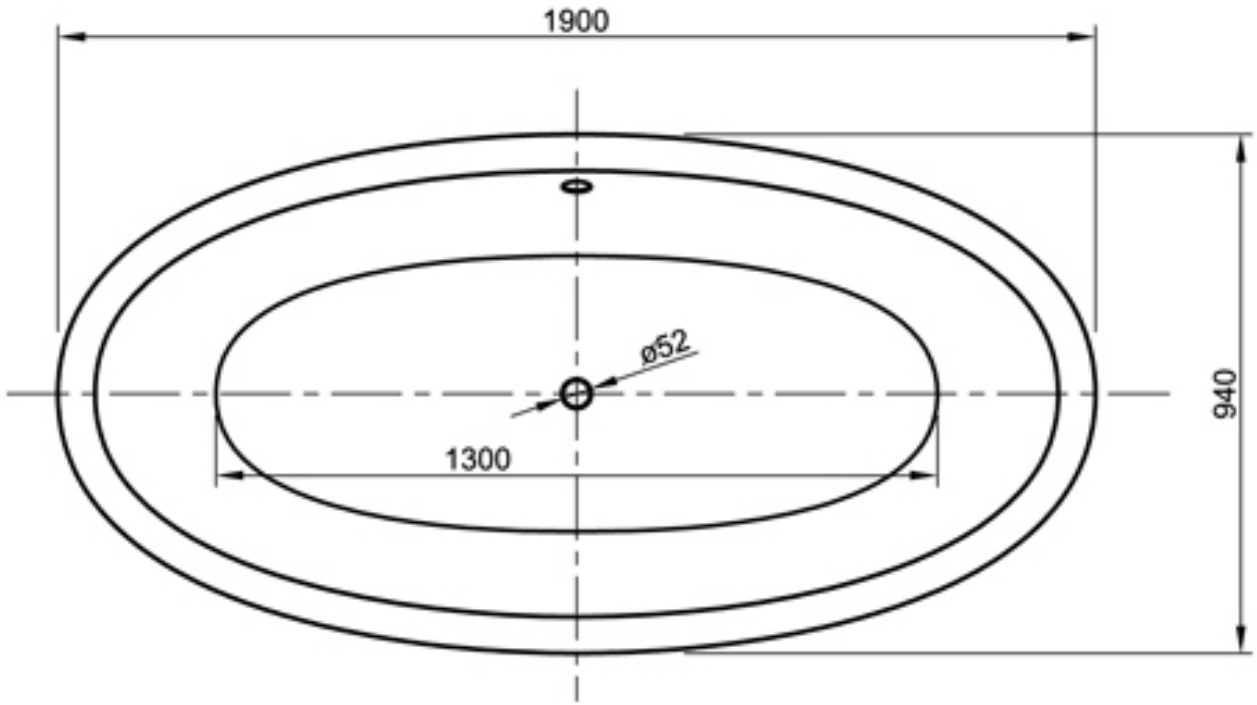

CLOSE